EXCEPT AS OTHERWISE PROVIDED BY CONTRACT, THIS DRAWING AND SPECIFICATIONS SHALL NOT BE REPRODUCED, COPIED OR USED AS THE BASIS FOR MANUFACTURE OR SALE OF MATTER DEPICTED HEREIN WITHOUT THE EXPRESSED WRITTEN PERMISSION OF THE CLAUDE LAVAL CORPORATION, OR ITS ASSIGNEES.

THIS DRAWING HAS BEEN GENERATED AND IS MAINTAINED BY A CAD SYSTEM. CHANGES SHALL ONLY BE INCORPORATED AS DIRECTED BY AN APPROVED ENGINEERING CHANGE ORDER (ECO).
PAPER COPIES ARE UNCONTROLLED.

REVISIONS				
ECN	REV.	DESCRIPTION	DATE	APPROVED

NOTES:

1. INLET & OUTLET ARE 1-1/2" MNPT PIPE.
2. MAXIMUM PRESSURE: 150 psi (10.3 bar).
3. MAXIMUM TEMPERATURE: 180°F (82.2°C).
4. PRESSURE LOSS: 3-12 psid (.2-.8 bar) AT RATED FLOW.
5. RATED FLOW: 45-70 gpm (10-16 m³/hr).
6. APPROXIMATE DRY WEIGHT: 48 lbs (21.8 kg).
7. FINISH: GLASS BLAST (EXTERIOR ONLY).

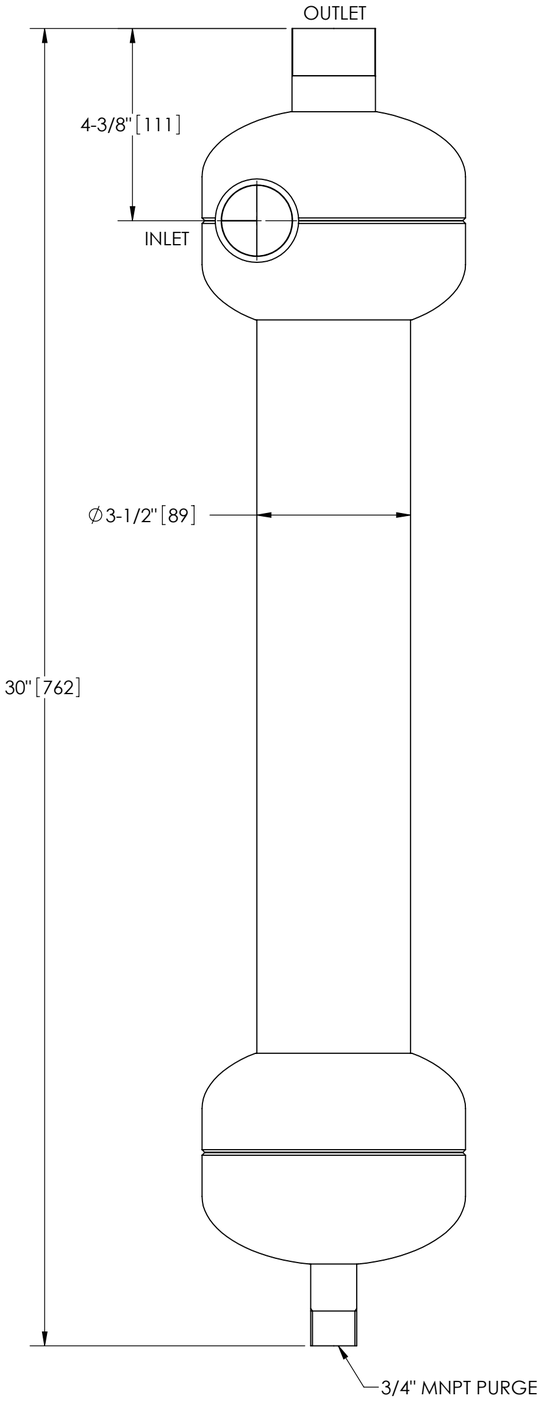

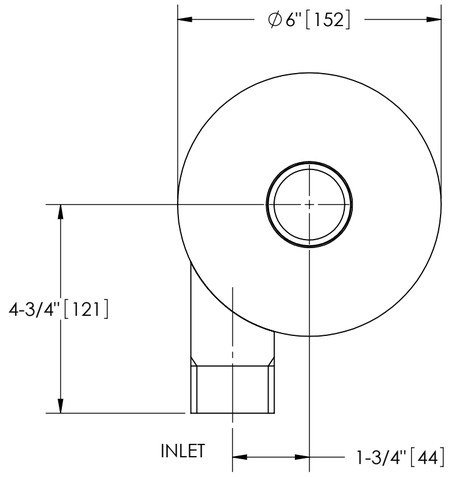

TOP VIEW

SUBMITTAL DRAWING

This drawing is submitted for spatial consideration only. Do not pre-plumb to these dimensions.

UNLESS OTHERWISE SPECIFIED:
DIMENSIONS ARE IN: INCHES [mm]
TOLERANCES ARE:
FRACTIONS ± 1" DECIMALS .XX ± .01 .XXX ± .005 .XXXX ± .0005 ANGLES ± 1/4°
DO NOT SCALE DRAWING

MATERIAL: TYPE 316L STAINLESS STEEL

FINISH: GLASS BLAST

ENGINEERED FOR: STANDARD

APPROVALS	DATE
DRAWN AMF	7/22/10
ENGR JBI	10/13/09
MFG -	-
WORK ORDER	QTY.

CLAUDE LAVAL CORP.
FRESNO, CALIFORNIA 93727
WWW.LAKOS.COM
LAVAL UNDERGROUND SURVEYS

TITLE: ILS-0150, SEPARATOR, 45-70 gpm, 316L SS

SIZE	MODEL NO.	DWG NO.	REV.
C		100297	E
SCALE 3:8		EST. WT. 48 lb	SHEET 1 OF 1

DWG NO. 100297 SH 1 REV. E

GEDO
Distribution et conseil : GEDO FRANCE
04 85 88 02 75 | separateur@gedo.fr | separateurs.gedo.fr
565 avenue du Prado - 13008 Marseille - France