EXCEPT AS OTHERWISE PROVIDED BY CONTRACT, THIS DRAWING AND SPECIFICATIONS SHALL NOT BE REPRODUCED, COPIED OR USED AS THE BASIS FOR MANUFACTURE OR SALE OF MATTER DEPICTED HEREIN WITHOUT THE EXPRESSED WRITTEN PERMISSION OF THE CLAUDE LAVAL CORPORATION, OR ITS ASSIGNEES.

REVISIONS				
ECN	REV.	DESCRIPTION	DATE	APPROVED

NOTES:

1. INLET & OUTLET ARE 1" MNPT PIPE.
2. MAXIMUM PRESSURE: 150 psi (10.3 bar).
3. MAXIMUM TEMPERATURE: 180°F (82.2°C).
4. PRESSURE LOSS: 5-12 psid (.3-.8 bar) AT RATED FLOW.
5. RATED FLOW: 19-32 gpm (4.5-7.5 m³/hr).
6. APPROXIMATE DRY WEIGHT: 24 lbs (11 kg).
7. FINISH: LAKOS BLUE (EXTERIOR ONLY).

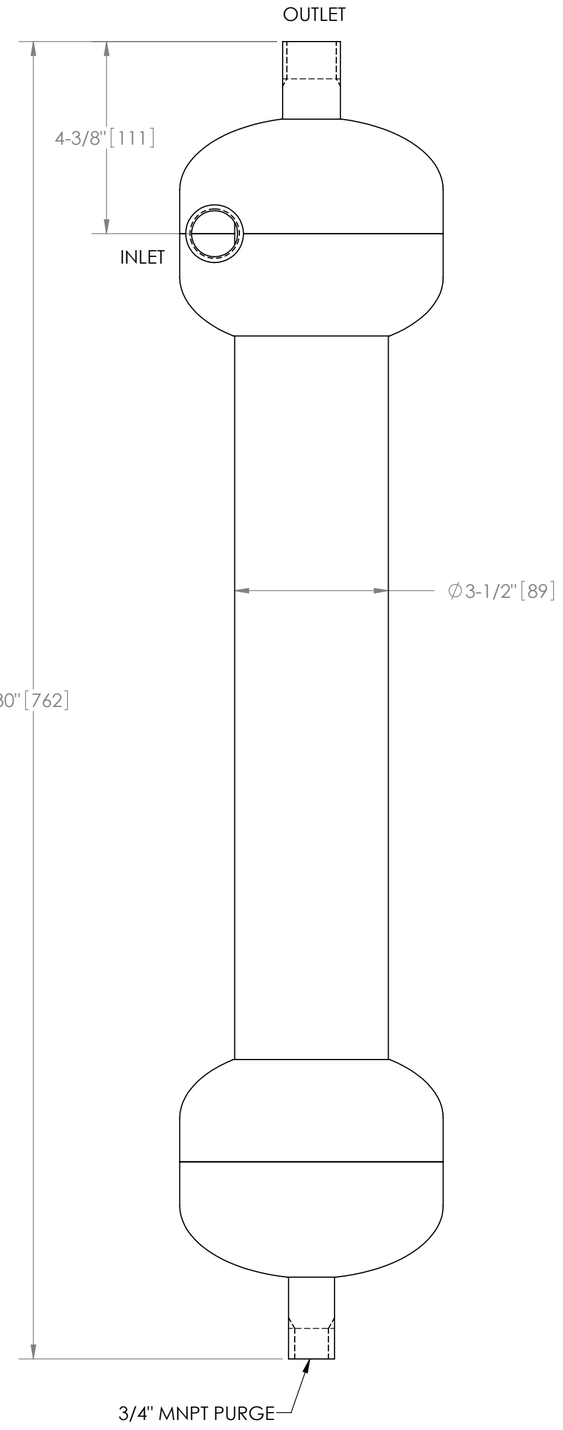

THIS DRAWING HAS BEEN GENERATED AND IS MAINTAINED BY A CAD SYSTEM. CHANGES SHALL ONLY BE INCORPORATED AS DIRECTED BY AN APPROVED ENGINEERING CHANGE ORDER (ECO).

PAPER COPIES ARE UNCONTROLLED.

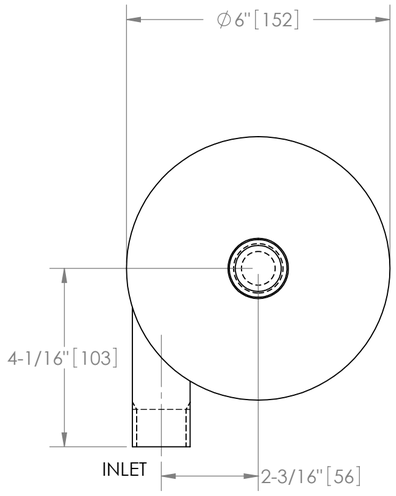

TOP VIEW

SUBMITTAL DRAWING

This drawing is submitted for spatial consideration only. Do not pre-plumb to these dimensions.

DWG NO. 100292 SH 1 REV. E

UNLESS OTHERWISE SPECIFIED: DIMENSIONS ARE IN: INCHES [mm] TOLERANCES ARE: FRACTIONS ± 1/4" DECIMALS .XX ± .01 .XXX ± .005 .XXXX ± .0005 ANGLES ± 1/4°	ENGINEERED FOR: STANDARD	CLAUDE LAVAL CORP. FRESNO, CALIFORNIA 93727 WWW.LAKOS.COM	LAVAL UNDERGROUND SURVEYS
DO NOT SCALE DRAWING	APPROVALS / DATE	TITLE: ILB-0100, SEPARATOR 19-32 gpm, CARBON STEEL	
MATERIAL: CLASS P-1 MILD CARBON STEEL	DRAWN: AMF 2/18/09		
FINISH: LAKOS BLUE	ENGR: - -	SIZE: C MODEL NO.	DWG NO. 100292 REV. E
	MFG: - -	SCALE: 3:8	EST. WT. 24 lb SHEET 1 OF 1
	WORK ORDER / QTY.		

GEDO
Distribution et conseil : GEDO FRANCE
04 85 88 02 75 | separateur@gedo.fr | separateurs.gedo.fr
565 avenue du Prado - 13008 Marseille - France