EXCEPT AS OTHERWISE PROVIDED BY CONTRACT, THIS DRAWING AND SPECIFICATIONS SHALL NOT BE REPRODUCED, COPIED OR USED AS THE BASIS FOR MANUFACTURE OR SALE OF MATTER DEPICTED HEREIN WITHOUT THE EXPRESSED WRITTEN PERMISSION OF THE CLAUDE LAVAL CORPORATION, OR ITS ASSIGNEES.

REVISIONS				
ZONE	REV.	DESCRIPTION	DATE	APPROVED

THIS DRAWING HAS BEGENERATED AND IS MAINTAINED BY A CAD SYSTEM. CHANGES SHALL ONLY BE INCORPORATED AS DIRECTED BY AN APPROVED ENGINEERING CHANGE ORDER (ECO).
PAPER COPIES ARE UNCONTROLLED.

NOTES:

1. INLET & OUTLET ARE 3" MNPT.
2. MAXIMUM PRESSURE: 150 psi (10.3 bar).
3. MAXIMUM TEMPERATURE: 180°F (82.2°C).
4. PRESSURE LOSS: 5-12 psid (.3-.8 bar) AT RATED FLOW.
5. RATED FLOW: 148-290 gpm (33.5-66.0 m³/hr).
6. APPROXIMATE DRY WEIGHT: 88 lbs (40 kg).
7. FINISH: LAKOS BLUE (EXTERIOR ONLY).

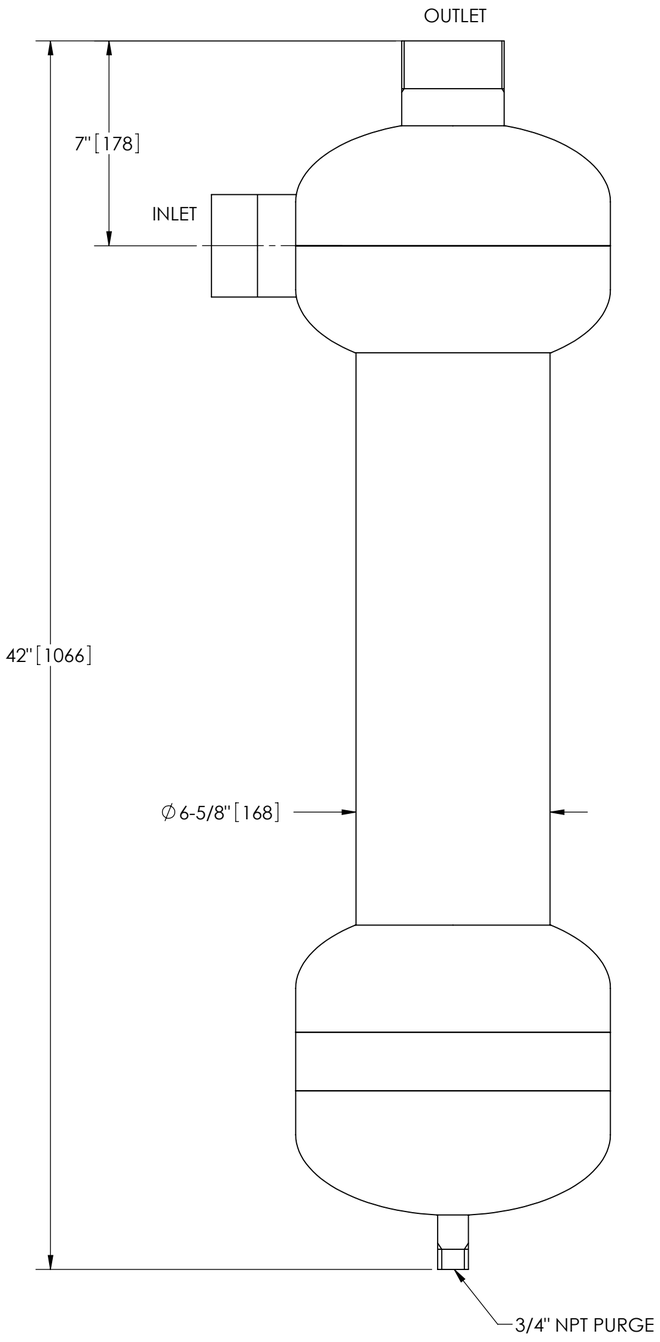

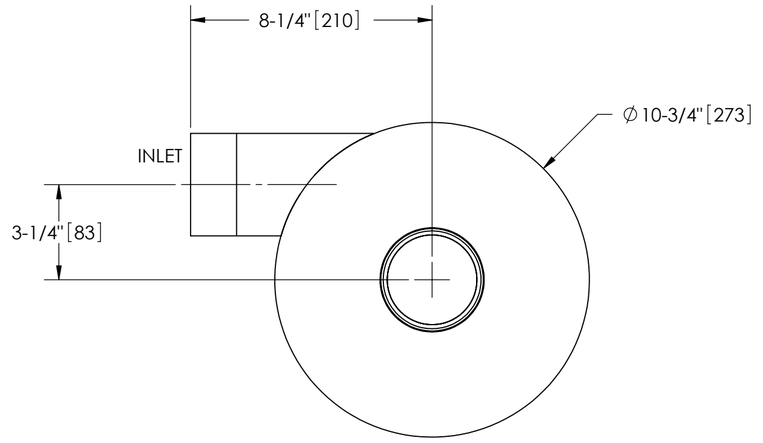

TOP VIEW

SUBMITTAL DRAWING

This drawing is submitted for spatial consideration only. Do not pre-plumb to these dimensions.

UNLESS OTHERWISE SPECIFIED:
DIMENSIONS ARE IN: INCHES [mm]
TOLERANCES ARE:
FRACTIONS ± 1" DECIMALS .XX ± .01 .XXX ± .005 .XXXX ± .0005 ANGLES ± 1/4°
DO NOT SCALE DRAWING

MATERIAL: CLASS P-1 MILD CARBON STEEL

FINISH: POWDERCOAT LAKOS BLUE

ENGINEERED FOR: STANDARD

APPROVALS	DATE
DRAWN AMF	7/29/10
ENGR -	-
MFG -	-
WORK ORDER	QTY.

LAKOS® CLAUDE LAVAL CORP.
FRESNO, CALIFORNIA 93727
WWW.LAKOS.COM
LAVAL UNDERGROUND SURVEYS

TITLE: ILB-0300, SEPARATOR, 148-290 gpm, CARBON STEEL

SIZE	MODEL NO.	DWG NO.	REV.
C		100302	G

SCALE 1:4 | EST. WT. 88 lb | SHEET 1 OF 1

DWG NO. 100302 SH REV. G

GEDO
Distribution et conseil : GEDO FRANCE
04 85 88 02 75 | separateur@gedo.fr | separateurs.gedo.fr
565 avenue du Prado - 13008 Marseille - France