EXCEPT AS OTHERWISE PROVIDED BY CONTRACT, THIS DRAWING AND SPECIFICATIONS SHALL NOT BE REPRODUCED, COPIED OR USED AS THE BASIS FOR MANUFACTURE OR SALE OF MATTER DEPICTED HEREIN WITHOUT THE EXPRESSED WRITTEN PERMISSION OF THE CLAUDE LAVAL CORPORATION, OR ITS ASSIGNEES.

REVISIONS				
ECN	REV.	DESCRIPTION	DATE	APPROVED

NOTES:

1. INLET & OUTLET ARE 3/8" MNPT PIPE.
2. MAXIMUM PRESSURE: 150 psi (10.3 bar).
3. MAXIMUM TEMPERATURE: 180ºF (82.2ºC).
4. PRESSURE LOSS: 5-12 psid (.3-.8 bar) AT RATED FLOW.
5. RATED FLOW: 3-6 gpm (0.7-1.5 m³/hr).
6. APPROXIMATE DRY WEIGHT: 6 lbs (3 kg).
7. FINISH: LAKOS BLUE (EXTERIOR ONLY).

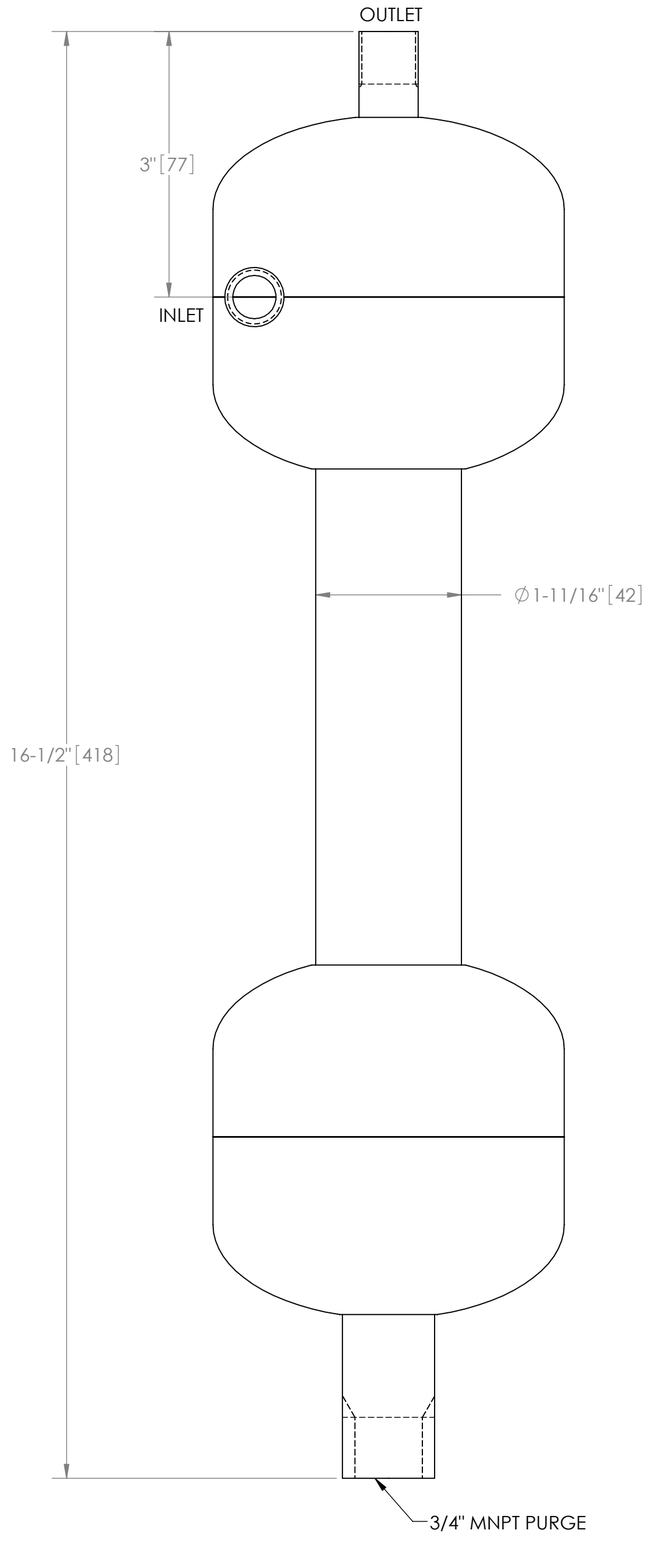

THIS DRAWING HAS BEEN GENERATED AND IS MAINTAINED BY A CAD SYSTEM. CHANGES SHALL ONLY BE INCORPORATED AS DIRECTED BY AN APPROVED ENGINEERING CHANGE ORDER (ECO).
PAPER COPIES ARE UNCONTROLLED.

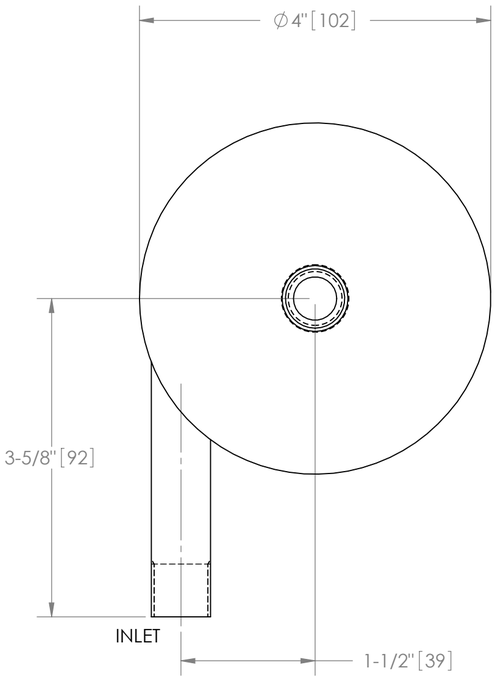

TOP VIEW

SUBMITTAL DRAWING

This drawing is submitted for spatial consideration only. Do not pre-plumb to these dimensions.

DWG NO. 100286 SH 1 REV. A

UNLESS OTHERWISE SPECIFIED:
DIMENSIONS ARE IN: INCHES [mm]
TOLERANCES ARE:
FRACTIONS ± 1/4" DECIMALS .XX ± .01 .XXX ± .005 .XXXX ± .0005 ANGLES ± 1/4°
DO NOT SCALE DRAWING

MATERIAL: CLASS P-1 MILD CARBON STEEL

FINISH: LAKOS BLUE

ENGINEERED FOR: STANDARD

APPROVALS	DATE
DRAWN AMF	2/17/09
ENGR -	-
MFG -	-
WORK ORDER	QTY.

CLAUDE LAVAL CORP.
FRESNO, CALIFORNIA 93727
WWW.LAKOS.COM
LAVAL UNDERGROUND SURVEYS

TITLE: ILB-0037, SEPARATOR
3-6 gpm, CARBON STEEL

SIZE	MODEL NO.	DWG NO.	REV.
C		100286	A
SCALE 3:4		EST. WT. 6 lb	SHEET 1 OF 1

GEDO
Distribution et conseil : GEDO FRANCE
04 85 88 02 75 | separateur@gedo.fr | separateurs.gedo.fr
565 avenue du Prado - 13008 Marseille - France