EXCEPT AS OTHERWISE PROVIDED BY CONTRACT, THIS DRAWING AND SPECIFICATIONS SHALL NOT BE REPRODUCED, COPIED OR USED AS THE BASIS FOR MANUFACTURE OR SALE OF MATTER DEPICTED HEREIN WITHOUT THE EXPRESSED WRITTEN PERMISSION OF THE CLAUDE LAVAL CORPORATION, OR ITS ASSIGNEES.

| REVISIONS | | | | |
|---|---|---|---|---|
| ZONE | REV. | DESCRIPTION | DATE | APPROVED |

NOTES:

1. INLET & OUTLET ARE 2"[51] MNPT PIPE.
2. MAXIMUM PRESSURE: 150 psi (10.3 bar).
3. MAXIMUM TEMPERATURE: 180ºF (82.2ºC).
4. PRESSURE LOSS: 5-12 psid (.3-.8 bar) AT RATED FLOW.
5. RATED FLOW: 65-108 gpm (15-25 m³/hr).
6. APPROXIMATE DRY WEIGHT: 55 lbs (25 kg).
7. FINISH: LAKOS BLUE (EXTERIOR ONLY).

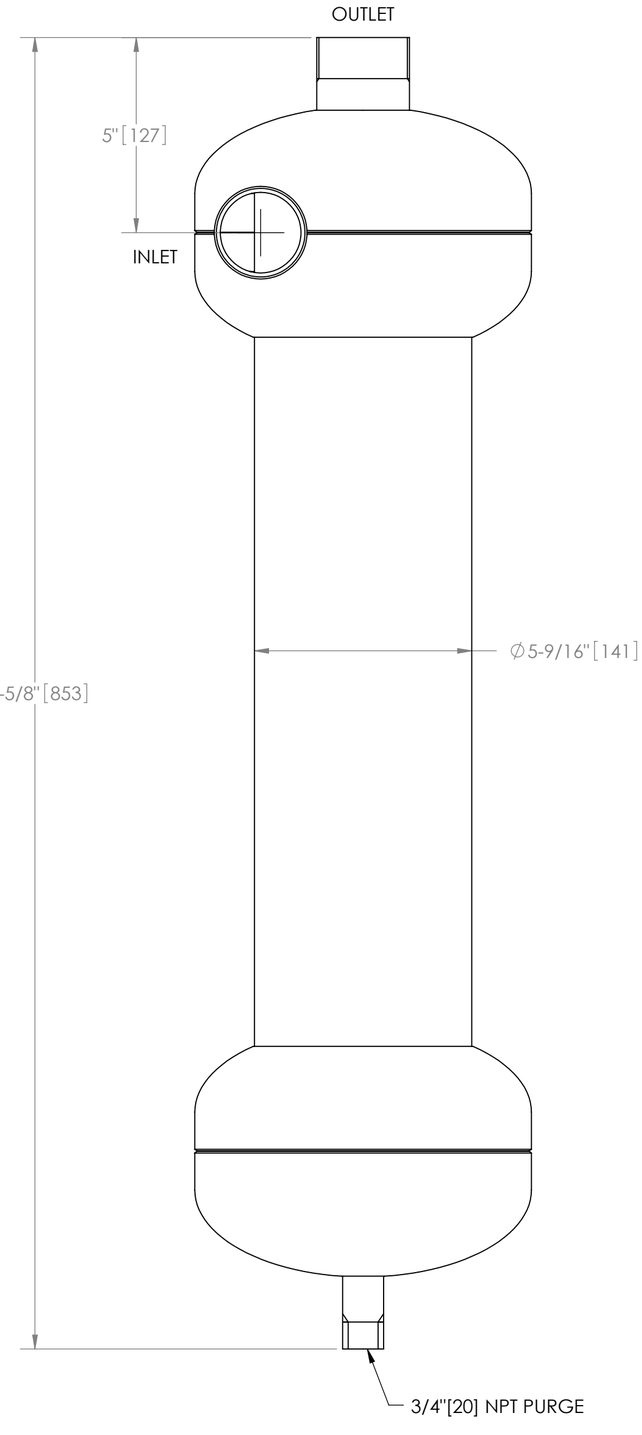


THIS DRAWING HAS BEEN GENERATED AND IS MAINTAINED BY A CAD SYSTEM. CHANGES SHALL ONLY BE INCORPORATED AS DIRECTED BY AN APPROVED ENGINEERING CHANGE ORDER (ECO).
PAPER COPIES ARE UNCONTROLLED.

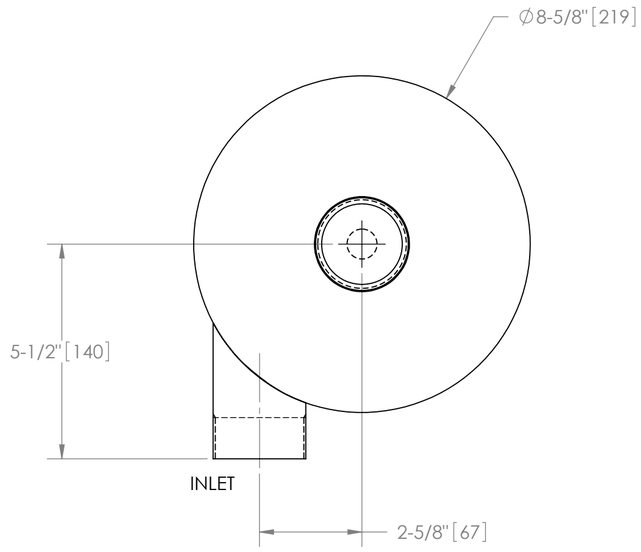


# SUBMITTAL DRAWING

This drawing is submitted for spatial consideration only. Do not pre-plumb to these dimensions.

UNLESS OTHERWISE SPECIFIED:
DIMENSIONS ARE IN: INCHES [mm]
TOLERANCES ARE:
FRACTIONS ± 1/4" DECIMALS .XX ± .01 .XXX ± .005 .XXXX ± .0005 ANGLES ± 1/4°
DO NOT SCALE DRAWING

MATERIAL: CLASS P-1 MILD CARBON STEEL

FINISH: LAKOS BLUE

ENGINEERED FOR: STANDARD

| APPROVALS | DATE |
|---|---|
| DRAWN AMF | 6/25/10 |
| ENGR - | - |
| MFG - | - |
| WORK ORDER | QTY. |

CLAUDE LAVAL CORP.
FRESNO, CALIFORNIA 93727
WWW.LAKOS.COM

LAVAL UNDERGROUND SURVEYS

TITLE: ILB-0200, SEPARATOR, 65-108 gpm, CARBON STEEL

| SIZE | MODEL NO. | DWG NO. | REV. |
|---|---|---|---|
| C | | 100298 | C |

SCALE 1:3 | EST. WT. 55 lb | SHEET 1 OF 1

DWG NO. 100298 SH 1 REV. C

**Distribution et conseil : GEDO FRANCE**
04 85 88 02 75 | separateur@gedo.fr | separateurs.gedo.fr
565 avenue du Prado - 13008 Marseille - France